WindObserver™ 65
Ultrasonic Anemometer

GILL

Key Features

- **Precision Ultrasonic Anemometer**
- **0-65m/s Wind Speed**
- **0-360º Wind Direction**
- **Free data logging software**
- **Optional de-icing system**
- **IP66 rated stainless steel construction**
- **Optional base mounts/cable exit**
- **Averaging/gusts to WMO guidelines**

The Gill WindObserver 65 is a precision, solid-state ultrasonic anemometer providing wind speed and direction data via a digital output and features an IP66 rated stainless steel housing, which is particularly suitable for use in saltwater environments.

This anemometer has an optional de-icing system enabling the sensor to operate effectively in environmental conditions experienced at high altitude or at sea and is recommended for use in aviation, marine and offshore applications.

Customer selectable vector rolling average and 3 second gust in accordance with WMO - No. 8 Seventh Edition 2008 ISBN 978-92-63-10008-5.

Lloyd's Register TYPE APPROVED

WIND SPEED

Range	0 - 65 m/s (0-145mph)
Starting threshold	0.01 m/s
Accuracy	±2% @12 m/s
Resolution	0.01 m/s
Offset	±0.01 m/s

WIND DIRECTION

Range	0 - 360°
Dead band direction	None
Accuracy	±2° @12 m/s
Resolution	1º

MEASUREMENT

Ultrasonic output rate	1Hz, 2Hz, 4Hz, 5Hz, 8Hz or 10Hz
Parameters	UV, Polar, NMEA, Tunnel
Units	m/s, knots, mph, kph, ft/min
Average (Selectable)	Rolling average - 1, 2, 10 m.n, Gust - 3s
Block average	0-3600s

DIGITAL OUPUT

Communication	RS422/RS485 full duplex/half duplex
Baud rates	1200, 2400, 4800, 9600, 19200, 38400
Formats	8 bit data; odd, even or no parity
Anemometer status	Supplied as part of standard message

POWER REQUIREMENT

Anemometer only	9-30 VDC (30mA @12 VDC)
Heating (optional)	3A @24 VAC or DC

MECHANICAL

External Construction	Stainless steel 316
Size	Refer to diagram overleaf
Weight	1.4kg

ENVIRONMENTAL

Protection Class	IP66 (NEMA4X)
Humidity	0% to 100% RH
Operating Temperature	-55°C to +70°C (Heated option)
Precipitation	300mm/hr
EMC	EN 60945: 2002, EN 61326-1: 2013
Icing	MILSTD810F Method 521.2 Procedure I

APPROVALS

Standards	Traceable to national standards
Site Calibration	None required. Integrity check unit (Zero wind) supplied as optional extra

ACCESSORIES

Pipe Mount	Contact Gill
WindView Software	Display/logging software

Typical Applications

- Aircraft Landing Systems
- Marine Vessel Dynamic Positioning Systems
- Ports and Harbours
- Road and Rail Monitoring and Safety Systems
- Wind Turbine Control Systems
- Building Control and Structural Safety
- High Altitude Weather Monitoring
- Power Generation and Transmission Safety

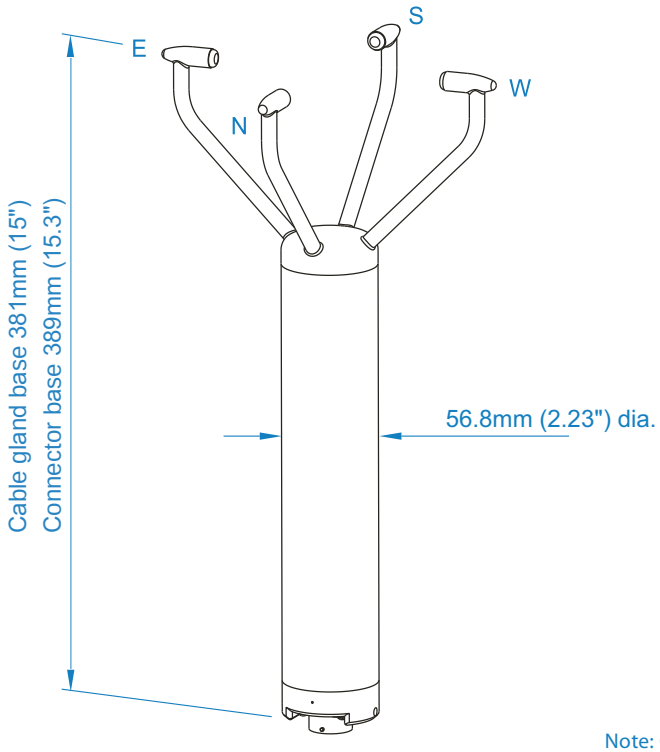

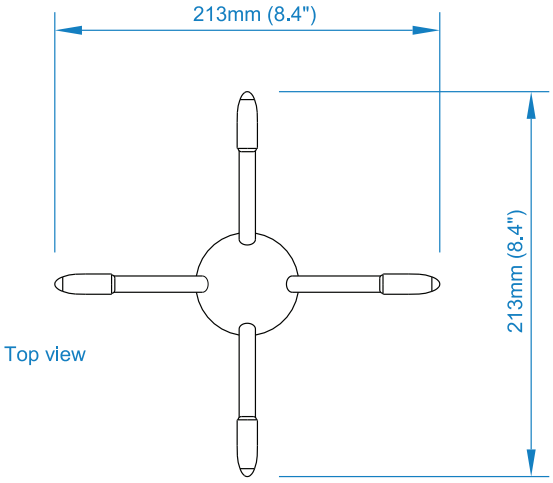

Note: Optional base mounts and cable exit options are available.

Specifications may be subject to change without prior notice.

Gill Instruments Limited
Saltmarsh Park, 67 Gosport Street
Lymington, Hampshire SO41 9EG
United Kingdom

Tel: +44 (0) 1590 613 500

contact@gillinstruments.com

gillinstruments.com
1390-0036 Iss 10

Gill Instruments Limited, Reg No. 2281574
Registered Office: Towngate House, 2-8 Parkstone Road, Poole. BH15 2PW

WindObserver Product Numbers Explained

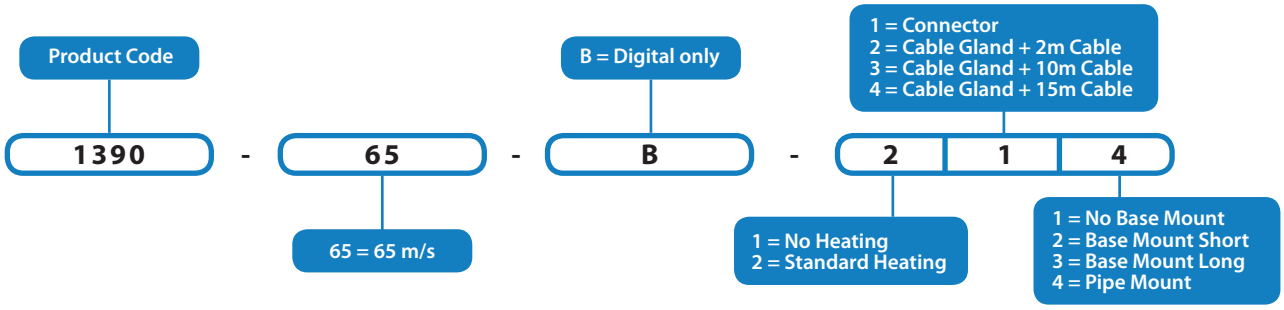

Product options may be model specific. Consult the Gill sales team for availability

Connection Options

Drawings below shown without base mounts

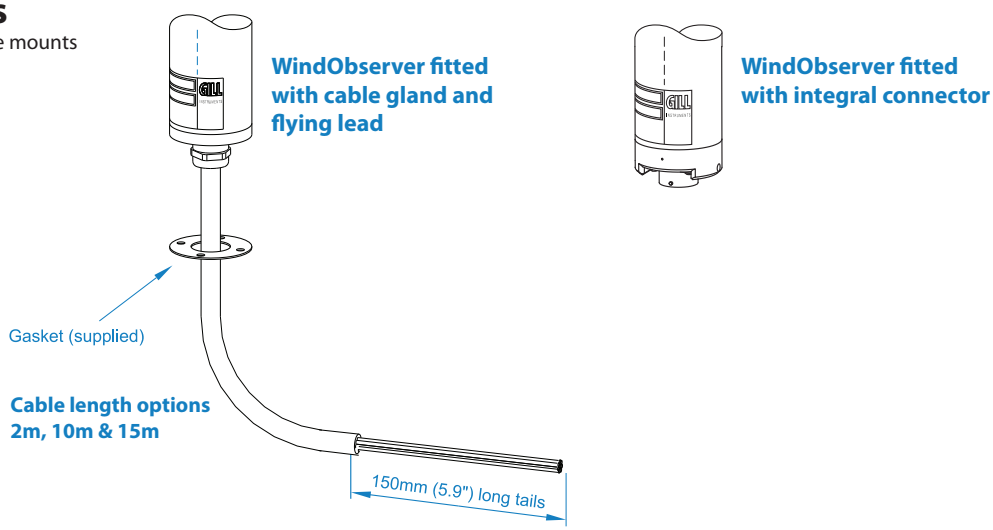

Base & Pipe Mount Options

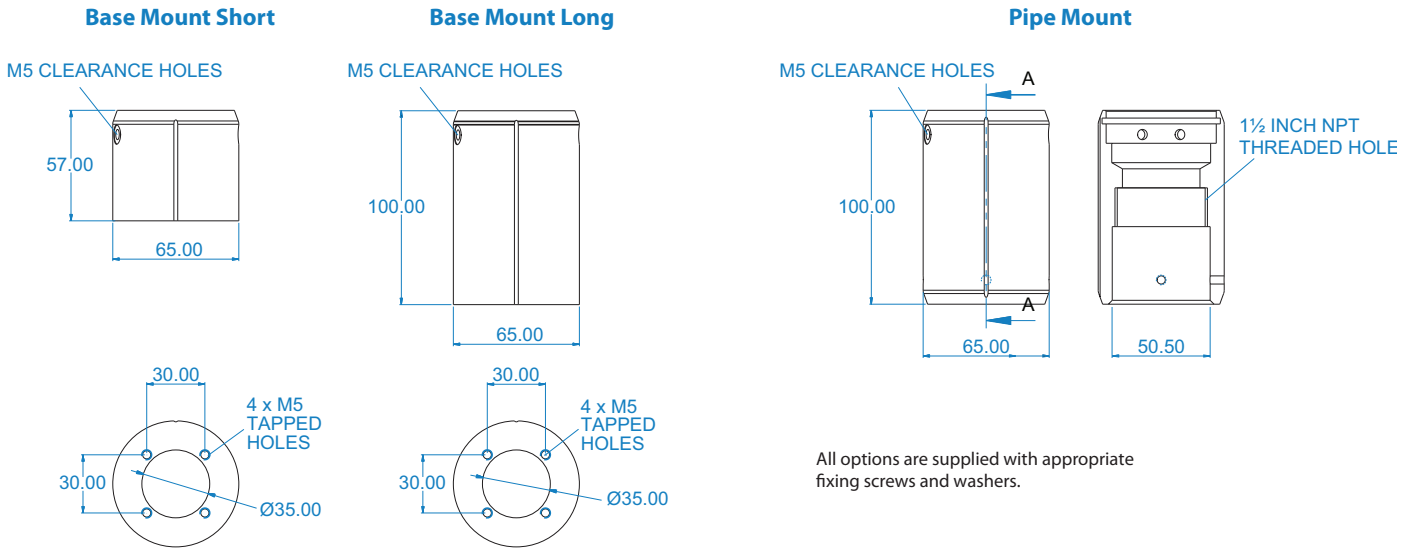

All options are supplied with appropriate fixing screws and washers.

Gill Instruments Limited

Saltmarsh Park, 67 Gosport Street
Lymington, Hampshire SO41 9EG
United Kingdom

Tel: +44 (0) 1590 613 500

contact@gillinstruments.com

gillinstruments.com

1390-0036 Iss 10

WindObserver™ 70

Ultrasonic Anemometer

GILL

Key Features

- **FAA & CAA accepted* for airport applications**
- **Heating power 7A @24VAC or DC (1W/cm2)**
- **0-70m/s wind speed range**
- **0-360º wind direction range (no dead band)**
- **Calibration traceable to national standards**
- **IP66 rated stainless steel construction**
- **Optional base mounts/cable exit**
- **Averaging/gusts to WMO guidelines**

The WindObserver 70 is a solid state, heated ultrasonic anemometer designed for use within the aviation industry and for more extreme weather conditions. The sensor has been accepted for service by both the FAA Federal Aviation Administration (USA) and the CAA Civil Aviation Authority (UK) for the observation and reporting of surface wind. This WindObserver meets the requirements of Annex 3 to the Convention on International Civil Aviation Organization (ICAO) when supplied as part of a suitable AWOS*.

With 150 Watts of electrical heating in the anemometer head producing 1 Watt/cm^2 and tested in accordance with MILSTD810F, the unit is particularly suited to operate as part of Aviation Automatic Weather Observing Systems, which are often exposed to extreme weather conditions. Manufactured from stainless steel with no moving parts the sensor requires no on-site calibration and minimal maintenance.

Customer selectable vector rolling average and 3 second gust in accordance with WMO - No. 8 Seventh Edition 2008 ISBN 978-92-63-10008-5.

*Accepted by the FAA & CAA for the observation and reporting of surface wind as part of a suitable AWOS (Automatic Weather Observing System)

Lloyd's Register TYPE APPROVED

WIND SPEED

Range	0 - 70 m/s (0-156mph)
Starting threshold	0.01 m/s
Accuracy	±2% @12 m/s
Resolution	0.01 m/s
Offset	±0.01 m/s

DIRECTION

Range	0 - 360°
Dead band direction	None
Accuracy	±2° @12 m/s
Resolution	1°

MEASUREMENT

Ultrasonic output rate	1 - 4Hz
Parameters	UV, Polar, NMEA
Units	m/s, knots, mph, kph, ft/min
Average (Selectable)	Rolling average - 1, 2, 10 m.n, Gust - 3s
Block average	0-3600s

POWER REQUIREMENT

Anemometer only	9 - 30 VDC (60mA max, 50mA average)
Heating	Max 7A @24 VAC or DC

DIGITAL OUTPUT

Communication (Operat'n)	RS422/RS485 full duplex/half duplex
Baud Rates	1200, 2400, 4800, 9600, 19200, 38400
Formats	8 bit data; odd, even or no parity
Anemometer status	Supplied as part of standard message

MECHANICAL

External construction	Stainless steel 316
Size	Refer to diagram overleaf
Weight	1.7kg (with 2m cable) 1.3kg (with connector)

ENVIRONMENTAL

Protection class	IP66 (NEMA4X)
Humidity	0% to 100%
Operating temperature	-55°C to +70°C (with heating)
Precipitation	300mm/hr
EMC	EN 61326-1: 2013, EN60945:2002
Icing	MILSTD810F Method 521.2 Procedure I

APPROVALS

Standards	Traceable to national standards
Site Calibration	None required. Integrity check unit (Zero wind) supplied as optional extra

Typical Applications

- Aviation Weather Observing Systems
- Aircraft Landing Systems
- Remote Meteorological Systems
- Helicopter Landing Pads
- Transport Safety

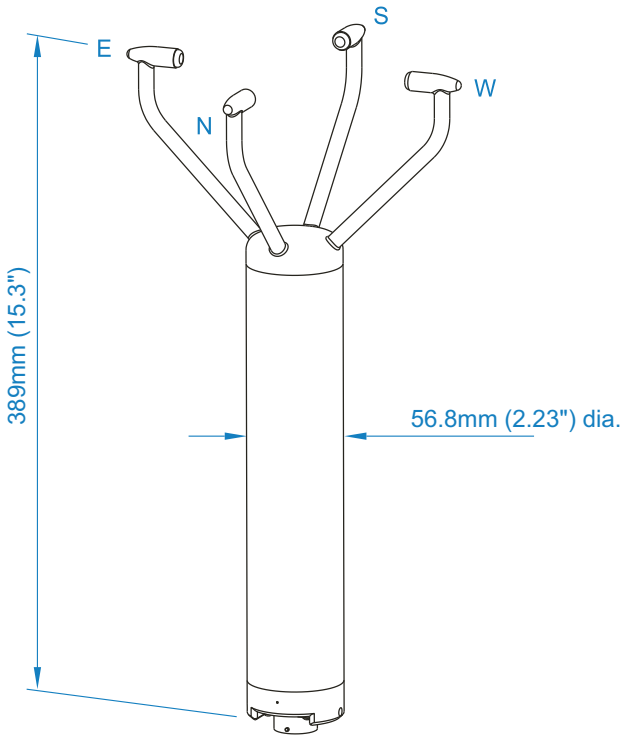

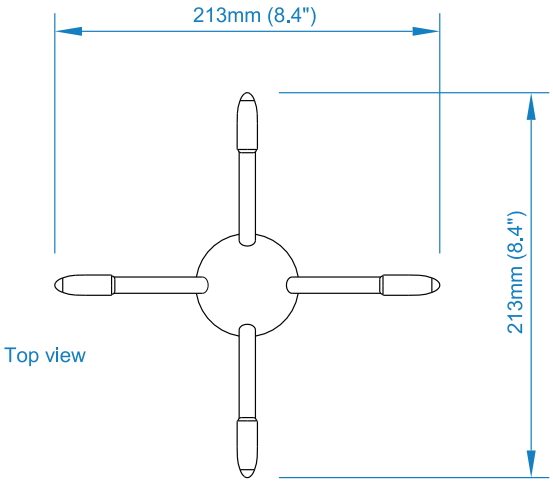

Note: Optional base mounts and cable exit options are available.

Specifications may be subject to change without prior notice.

Gill Instruments Limited
Saltmarsh Park, 67 Gosport Street
Lymington, Hampshire SO41 9EG
United Kingdom

Tel: +44 (0) 1590 613 500

contact@gillinstruments.com

gillinstruments.com
1390-0033 - Iss 7

Gill Instruments Limited, Reg No. 2281574
Registered Office: Towngate House, 2-8 Parkstone Road, Poole. BH15 2PW

WindObserver Product Numbers Explained

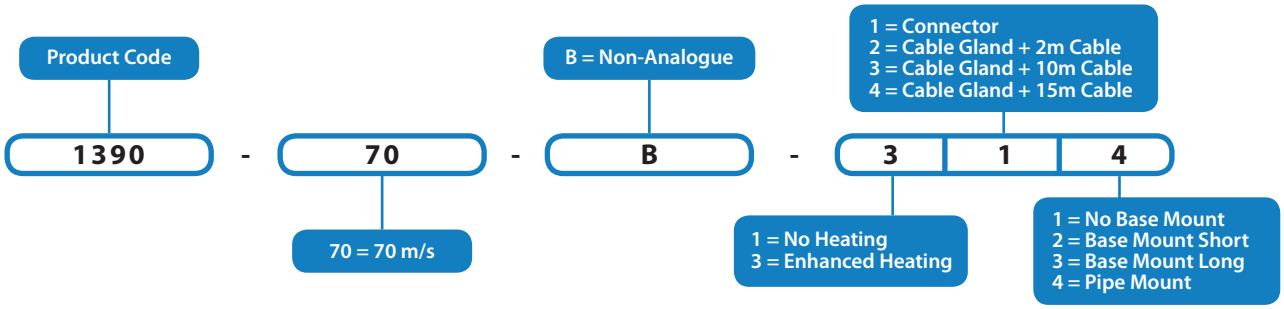

Product options may be model specific. Consult the Gill sales team for availability

Connection Options

Drawings below shown without base mounts

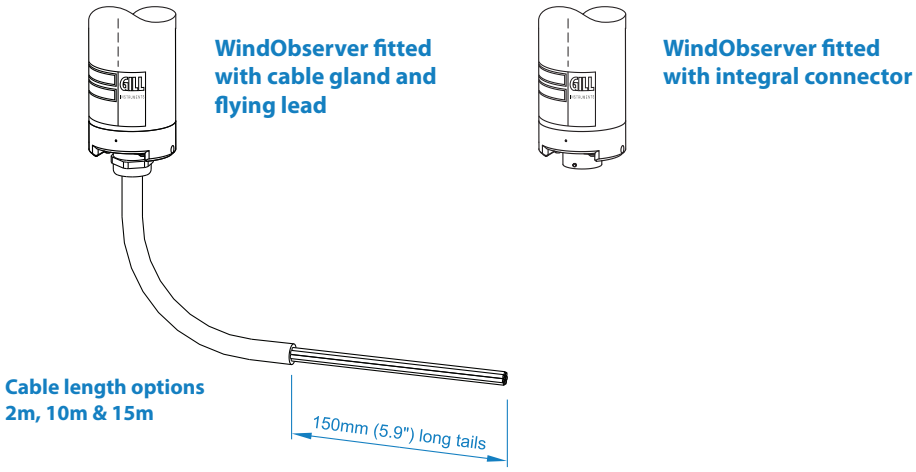

Base & Pipe Mount Options

Base Mount Short

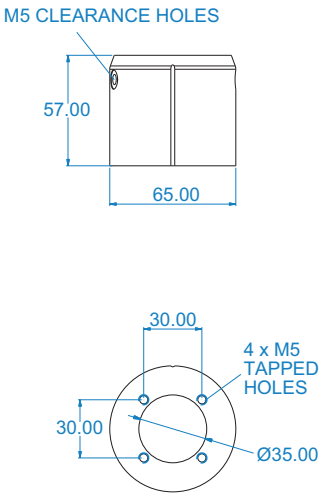

Base Mount Long

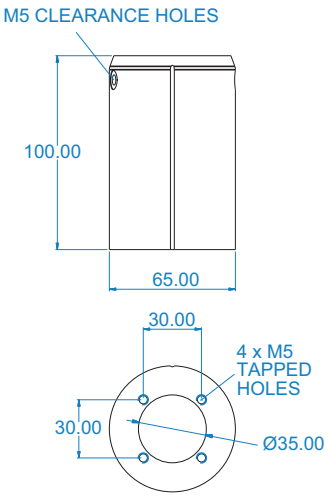

Pipe Mount

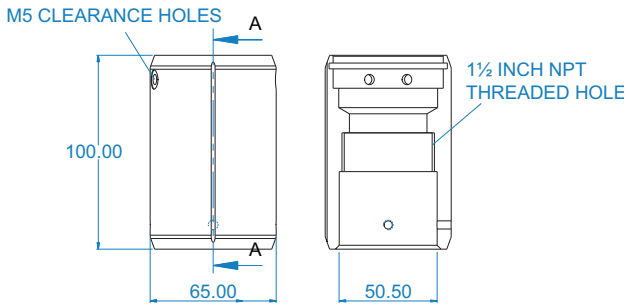

All options are supplied with appropriate fixing screws and washers.

Gill Instruments Limited

Saltmarsh Park, 67 Gosport Street
Lymington, Hampshire SO41 9EG
United Kingdom

Tel: +44 (0) 1590 613 500

contact@gillinstruments.com

gillinstruments.com

1390-0033 - Iss 7

WindObserver™ 75

Ultrasonic Anemometer

GILL

Key Features

- **Heating power 7A @ 24VAC or DC (1W/cm²)**
- **0-75m/s wind speed range**
- **0-360° wind direction range (no dead band)**
- **Wind speed accuracy for turbine control ±1% within ±25° of datum**
- **Calibration traceable to national standards**
- **IP66 rated stainless steel construction**
- **Optional base mounts/cable exit**
- **Averaging/gusts to WMO guidelines**

The WindObserver 75 has been developed for measuring higher wind speeds in extreme weather environments featuring 150 Watts of electrical heating power in the anemometer head. This anemometer has been designed to remain ice free in most freezing weather conditions. The sensor provides data via RS422/RS485 bidirectional link, which allows several units to be networked together and data logged on demand.

With innovative transducer design, this anemometer boasts a very high wind speed range of 0 - 75 m/s (0-168mph) and gives an output status indicating the validity of data, so that you can be confident that the instrument is providing accurate information. Constructed from Stainless steel this anemometer meets the stringent performance criteria specified by wind turbine manufacturers, airports, marine, oil and gas production, and meteorological organisations around the world.

Customer selectable vector rolling average and 3 second gust in accordance with WMO - No. 8 Seventh Edition 2008 ISBN 978-92-63-10008-5.

Lloyd's Register TYPE APPROVED

WIND SPEED

Range	0 - 75 m/s (0-168mph)
Starting threshold	0.01 m/s
Accuracy	±2% @12 m/s (1% for turbine control)
Resolution	0.01 m/s
Offset	±0.01 m/s

DIRECTION

Range	0 - 360°
Dead band direction	None
Accuracy	±2° @12 m/s (1° for turbine control)
Resolution	1°

MEASUREMENT

Ultrasonic output rate	1 - 4 Hz
Parameters	UV, Polar, NMEA
Units	m/s, knots, mph, kph, ft/min
Average (Selectable)	Rolling average - 1, 2, 10 m.n, Gust - 3s
Block average	0-3600s

POWER REQUIREMENT

Anemometer only	9 - 30 VDC (60mA max, 50mA average)
Heating	Max 7A @24 VAC or DC

DIGITAL OUTPUT

Communication (Operat'n)	RS422/RS485 full duplex/half duplex
Baud rates	1200, 2400, 4800, 9600, 19200, 38400
Formats	8 bit data; odd, even or no parity
Anemometer status	Supplied as part of standard message

MECHANICAL

External construction	Stainless steel 316
Size	Refer to diagram overleaf
Weight	1.7kg (with 2m cable) 1.3kg (with connector)

ENVIRONMENTAL

Protection class	IP66 (NEMA4X)
Humidity	0% to 100% RH
Operating temperature	-55°C to +70°C (with heating)
Precipitation	300mm/hr
EMC	EN 61326-1: 2013, EN 60945: 2002
Icing	MILSTD810F Method 521.2 Procedure I

APPROVALS

Standards	Traceable to national standards
Site calibration	None required. Integrity check unit (Zero wind) supplied as optional extra

Typical Applications

- Building controls/structural safety
- High altitude mountainous regions
- Arctic/Antarctic Weather monitoring
- Marine vessels dynamic positioning systems
- Wind turbine control
- Road & rail tunnels/transport safety
- Ports & Harbours
- Aircraft landing systems

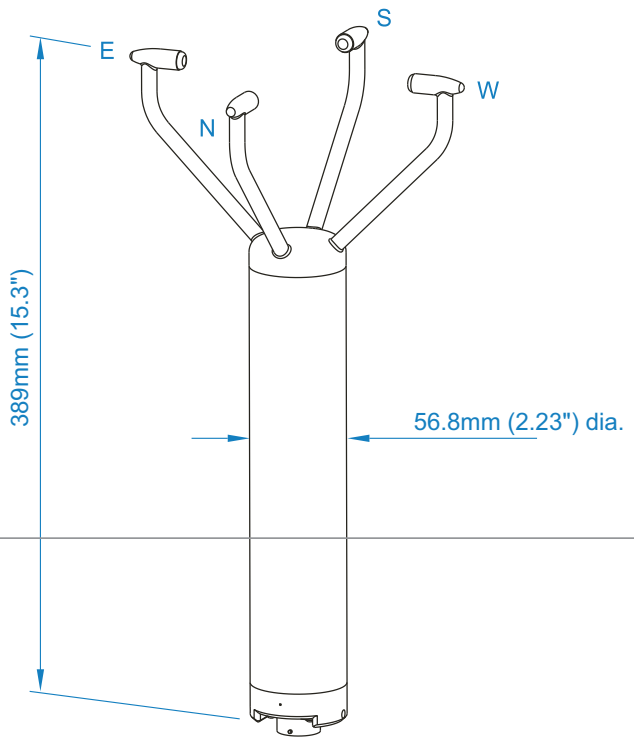

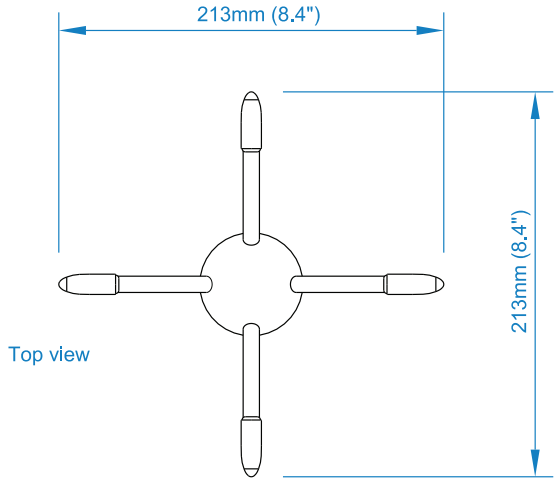

Note: Optional base mounts and cable exit options are available.

Specifications may be subject to change without prior notice.

Gill Instruments Limited
Saltmarsh Park, 67 Gosport Street
Lymington, Hampshire SO41 9EG
United Kingdom

Tel: +44 (0) 1590 613 500

contact@gillinstruments.com

gillinstruments.com
1390-0034 - Iss 10

Gill Instruments Limited, Reg No. 2281574
Registered Office: Towngate House, 2-8 Parkstone Road, Poole. BH15 2PW

WindObserver Product Numbers Explained

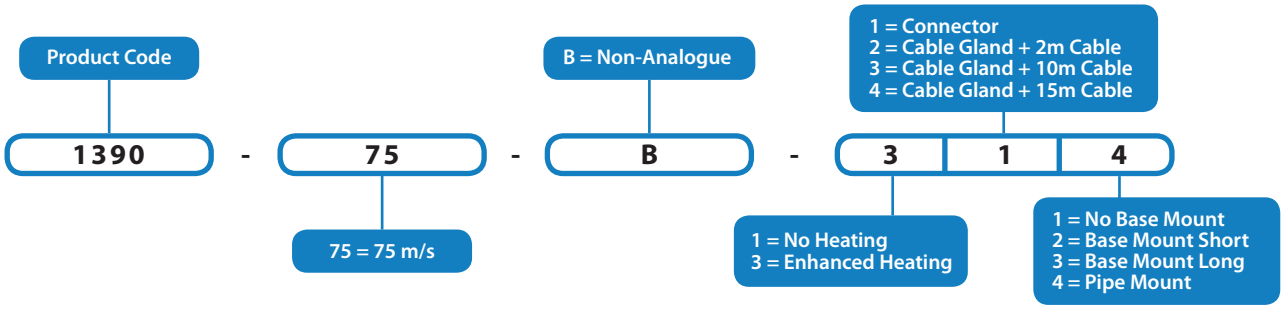

Product options may be model specific. Consult the Gill sales team for availability

Connection Options

Drawings below shown without base mounts

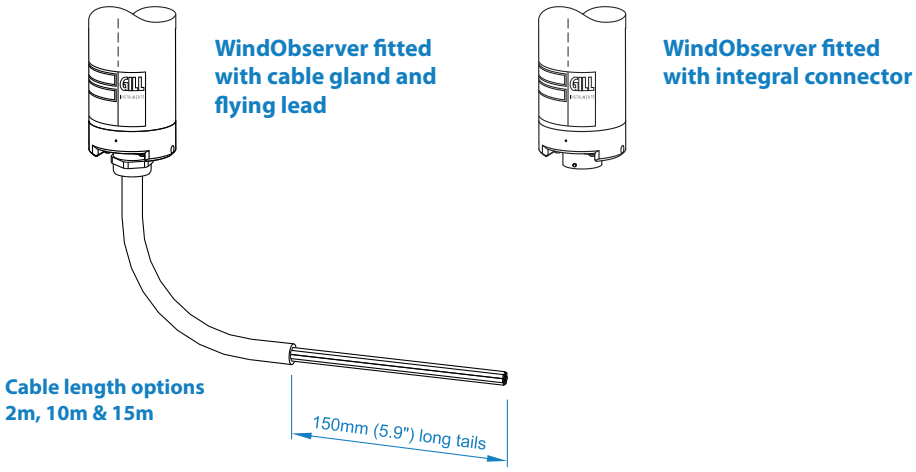

Base & Pipe Mount Options

Base Mount Short

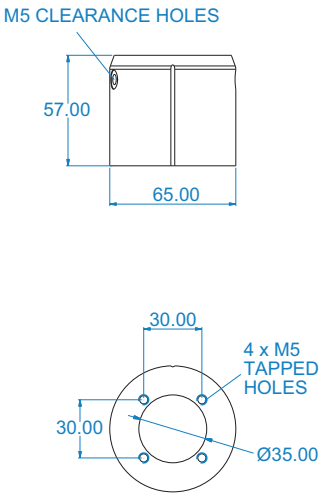

Base Mount Long

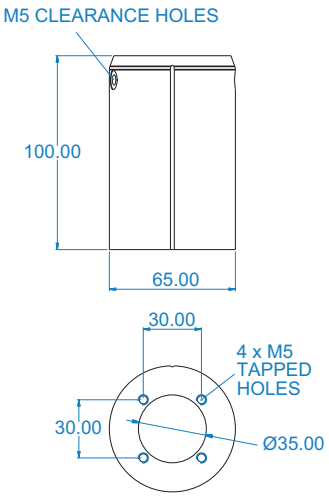

Pipe Mount

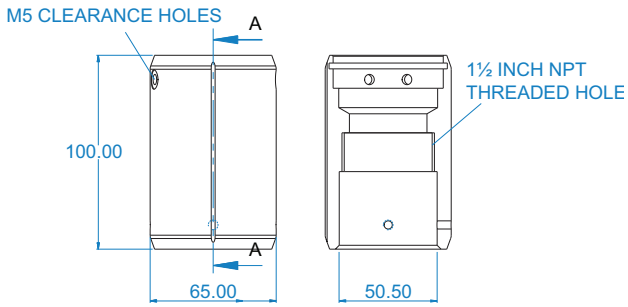

All options are supplied with appropriate fixing screws and washers.

Gill Instruments Limited

Saltmarsh Park, 67 Gosport Street
Lymington, Hampshire SO41 9EG
United Kingdom

Tel: +44 (0) 1590 613 500

contact@gillinstruments.com

gillinstruments.com

1390-0034 - Iss 10

WindObserver 90

Ultrasonic Anemometer

GILL

Key Features

- **Heating power 7A @ 24VAC or DC (1W/cm^2)**
- **0-90m/s wind speed range**
- **Calibrated in Merlin Wind Tunnel**
- **Calibration traceable to national standards**
- **IP66 rated stainless steel housing**
- **Connector or cable exit options**
- **Optional customer base mounts**
- **Averaging/gusts to WMO guidelines**

The WindObserver 90 has been developed for measuring higher wind speeds in extreme weather environments featuring 150 Watts of electrical heating power in the anemometer head. This anemometer has been designed to remain ice free in most freezing weather conditions. The sensor provides data via RS422/RS485 bidirectional link, which allows several units to be networked together and data logged on demand.

With innovative transducer design, this anemometer boasts a very high wind speed range of 0 - 90 m/s (0-201mph) and gives an output status indicating the validity of data, so that you can be confident that the instrument is providing accurate information. Constructed from Stainless steel this anemometer meets the stringent performance criteria specified by wind turbine manufacturers, airports, marine, oil and gas production, and meteorological organisations around the world.

WIND SPEED

Range	0 - 90 m/s (0-201mph)
Starting threshold	0.01 m/s
Accuracy*	±2% @ 12 m/s, ±4% @ 90 m/s
Resolution	0.01 m/s
Offset	±0.01 m/s

DIRECTION

Range	0 - 360°
Dead band direction	None
Accuracy	±2° @ 12 m/s
Resolution	1°

MEASUREMENT

Ultrasonic output rate	1-4 Hz
Parameters	UV, Polar, NMEA
Units	m/s, knots, mph, kph, ft/min
Averaging	Flexible 1-3600 seconds
Block average	0-3600s

POWER REQUIREMENT

Anemometer only	20 - 30 VDC (60mA max, 50mA average)
Heating	Max 7A @ 24 VAC or DC

DIGITAL OUTPUT

Communication (Operat'n)	RS422/RS485 full duplex/half duplex
Baud rates	1200, 2400, 4800, 9600, 19200, 38400
Formats	8 bit data; odd, even or no parity
Anemometer status	Supplied as part of standard message

MECHANICAL

External construction	Stainless steel 316
Size	Refer to diagram overleaf
Weight	1.7kg (with 2m cable) 1.3kg (with connector)

ENVIRONMENTAL

Protection class	IP66 (NEMA4X)
Humidity	0% to 100% RH
Operating temperature	-55°C to +70°C (with heating)
Precipitation	300mm/hr
EMC	EN 61326-1: 2013, EN 60945: 2002
Icing	MILSTD810F Method 521.2 Procedure I

APPROVALS

Standards	Traceable to national standards
Site calibration	None required. Integrity check unit (Zero wind) supplied as optional extra

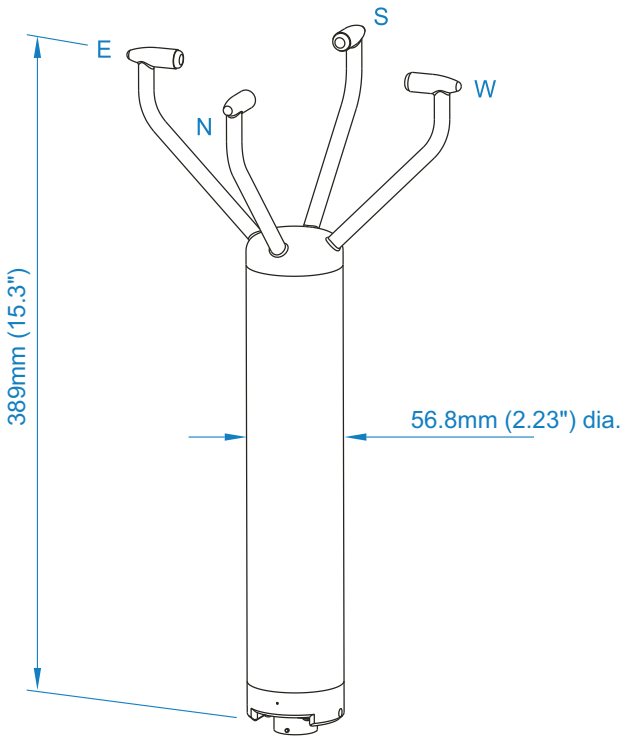

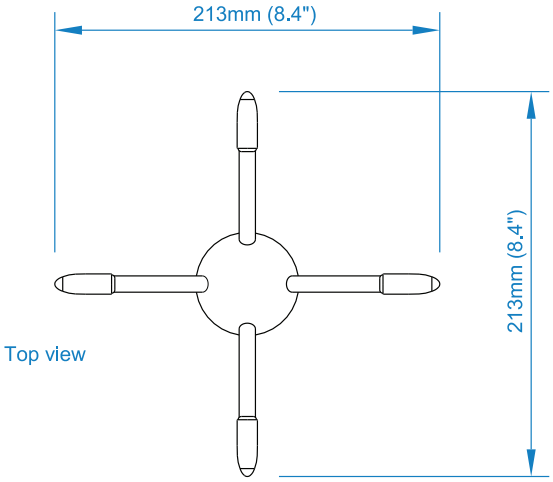

Note: Optional base mounts and cable exit options are available.

Specifications may be subject to change without prior notice.

*Performance verified in traceable wind tunnel.

Gill Instruments Limited

Saltmarsh Park, 67 Gosport Street
Lymington, Hampshire
SO41 9EG United Kingdom

Tel: +44 (0) 1590 613 500

contact@gillinstruments.com

gillinstruments.com

1390-0042 - Iss 13

WindObserver Product Numbers Explained

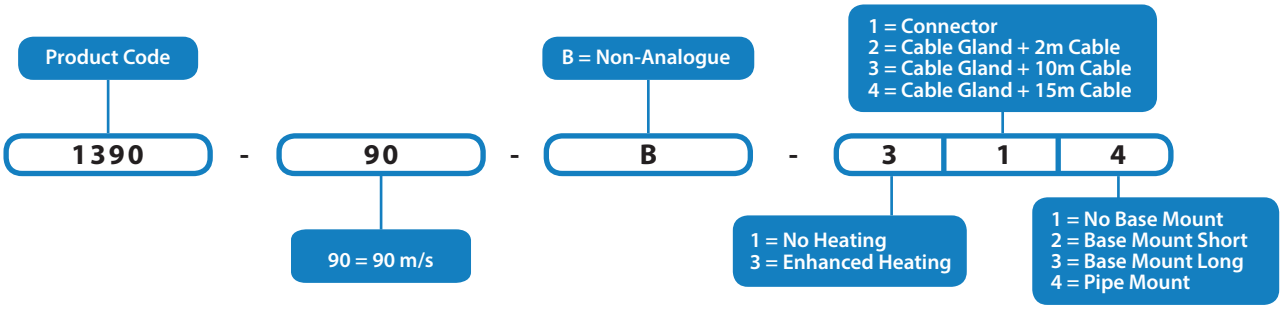

Product options may be model specific. Consult the Gill sales team for availability

Connection Options

Drawings below shown without base mounts

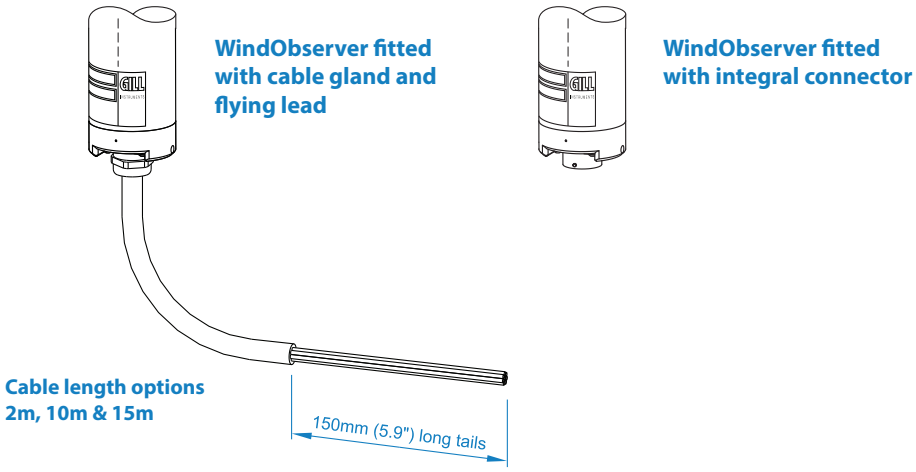

Base & Pipe Mount Options

Base Mount Short

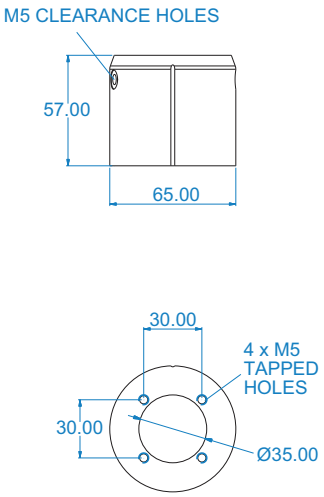

Base Mount Long

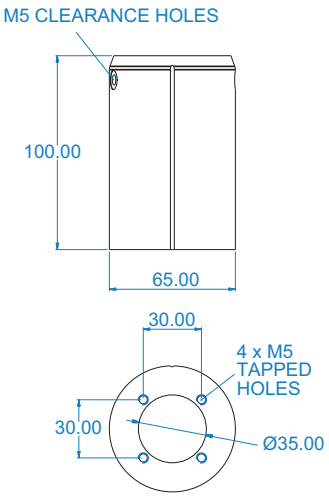

Pipe Mount

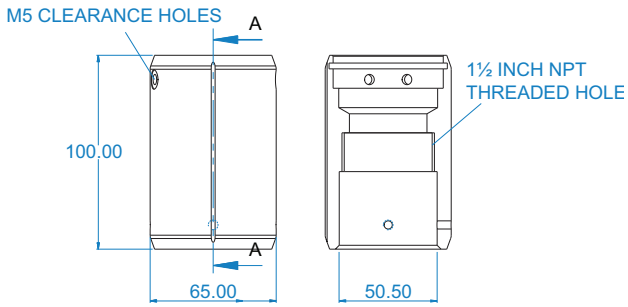

All options are supplied with appropriate fixing screws and washers.

Gill Instruments Limited

Saltmarsh Park, 67 Gosport Street
Lymington, Hampshire
SO41 9EG United Kingdom

Tel: +44 (0) 1590 613 500

contact@gillinstruments.com

gillinstruments.com

1390-0042 - Iss 13

WindObserver II
Ultrasonic Anemometer

GILL

Key Features

- **Precision Ultrasonic Anemometer**
- **0-65m/s Wind Speed**
- **0-360º Wind Direction**
- **Free data logging software**
- **Optional De-Icing System**
- **Stainless Steel construction**
- **Lloyds Register Type Approved**
- **Averaging/gusts to WMO guidelines**

The Gill WindObserver II is a precision, solid-state ultrasonic anemometer which has been type approved by the Lloyds Register for use in marine and offshore applications. The WindObserver II provides wind speed and direction data via 1 digital and 3 analogue outputs and features and IP66 rated stainless steel housing, which is particularly suitable for use in salt-water environments.

Offering a high wind speed measurement range, this anemometer has an optional de-icing system enabling the sensor to operate effectively in environmental conditions experienced at high altitude or at sea and is recommended for use in aviation, marine and offshore applications.

Customer selectable vector rolling average and 3 second gust in accordance with WMO - No. 8 Seventh Edition 2008 ISBN 978-92-63-10008-5.

WIND SPEED

Range	0 - 65 m/s (0-145mph)
Starting threshold	0.01 m/s
Accuracy	±2% @12 m/s
Resolution	0.01 m/s
Offset	±0.01 m/s

WIND DIRECTION

Range	0 - 360°
Dead band direction	None
Accuracy	±2° @12 m/s
Resolution	1°

MEASUREMENT

Ultrasonic output rate	1Hz, 2Hz, 4Hz, 5Hz, 8Hz or 10Hz
Parameters	UV, Polar, NMEA, Tunnel
Units	m/s, knots, mph, kph, ft/min
Average (Selectable)	Rolling average - 1, 2, 10 m.n, Gust - 3s
Block average	0-3600s

DIGITAL OUPUT

Communication	RS422/RS485 full duplex/half duplex
Baud rates	1200, 2400, 4800, 9600, 19200, 38400
Formats	8 bit data; odd, even or no parity
Anemometer status	Supplied as part of standard message

POWER REQUIREMENT

Anemometer only	9-30 VDC (40mA @12 VDC)
Heating (optional)	3A @24 VAC or DC

ANALOGUE OUTPUT

Quantity	3 (Speed, direction, status or sonic temp)
Scale	Multiples of ±10 m/s up to ±70 m/s
Type	±2.5 V, 0-5 V or 4-20mA
V output resistance	60 Ohms
4-20mA loading	10-300 Ohms

MECHANICAL

External Construction	Stainless steel 316
Size	381mm x 213mm
Weight	1.4kg

ENVIRONMENTAL

Protection Class	IP66 (NEMA4X)
Humidity	< 5% to 100% RH
Operating Temperature	-55°C to +70°C (Heated option)
Precipitation	300mm/hr
EMC	EN 60945: 2002, EN 61326-1: 2013
Icing	MILSTD810F Method 521.2 Procedure I

APPROVALS

Standards	Traceable to national standards Lloyds Register type approval
Site Calibration	None required. Integrity check unit (Zero wind) supplied as optional extra

ACCESSORIES

Pipe Mount	Contact Gill
WindView Software	Display/logging software

Typical Applications

- Aircraft Landing Systems
- Marine Vessel Dynamic Positioning Systems
- Ports and Harbours
- Road and Rail Monitoring and Safety Systems
- Wind Turbine Control Systems
- Building Control and Structural Safety
- High Altitude Weather Monitoring
- Power Generation and Transmission Safety

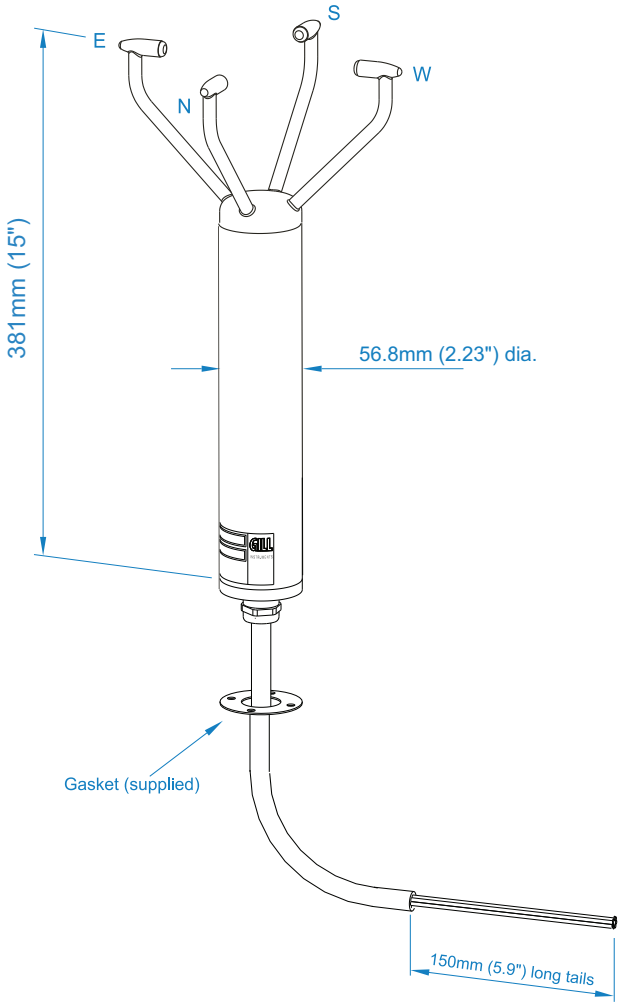

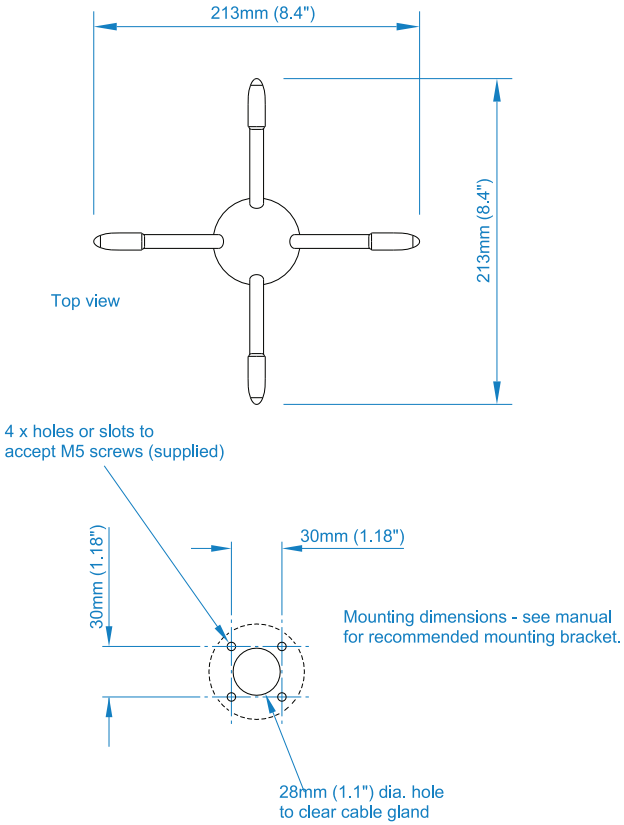

Specifications may be subject to change without prior notice.

Gill Instruments Limited

Saltmarsh Park, 67 Gosport Street
Lymington, Hampshire SO41 9EG
United Kingdom

Tel: +44 (0) 1590 613 500

contact@gillinstruments.com

gillinstruments.com

1390-0030 Iss 7

WindObserver IS

Intrinsically Safe Anemometer for Hazardous Areas

Key Features

- **ATEX, IECEx & UKEX certification**
- **Low voltage or mains voltage power supplies**
- **Galvanic isolation**
- **Gill or NMEA digital output**
- **Averaging/gusts to WMO guidelines**
- **Reduce offshore maintenance costs**
- **0-75m/s wind speed operation**
- **Over 10 years proven service worldwide**
- **Factory calibrated for life**

The WindObserver IS system is particularly suited to offshore oil production platforms, support tankers, drilling platforms, onshore petrochemical plants and other hazardous petrochemical environments. The system provides wind speed and direction data for use in producing offshore meteorological observations in accordance with UK CAA CAP 437.

The WindObserver IS is certified as 'Intrinsically Safe' for use in the 'Hazardous Area', whilst the associated power and communications interface is located in the 'Non Hazardous Area'.

The ATEX, IECEx & UKEX certification ensures that the wind system may be deployed on a worldwide basis without the need for expensive local recertification.

The system requires no regular maintenance, beyond a visual check, eliminating in-service maintenance costs in the offshore environment where the installation of reliable low maintenance equipment is essential.

Customer selectable vector rolling average and 3 second gust in accordance with WMO - No. 8 Seventh Edition 2008 ISBN 978-92-63-10008-5.

HAZARDOUS AREA

WindObserver IS
Intrinsically safe ultrasonic anemometer

NON-HAZARDOUS AREA

Low voltage (DC)
Power & communications interface (LVPCI)

or

Mains voltage (AC)
Power & communications interface (PCI)

ATEX & IECEx certification is valid for systems that include the WindObserver IS with a Gill Power & Communications Interface only

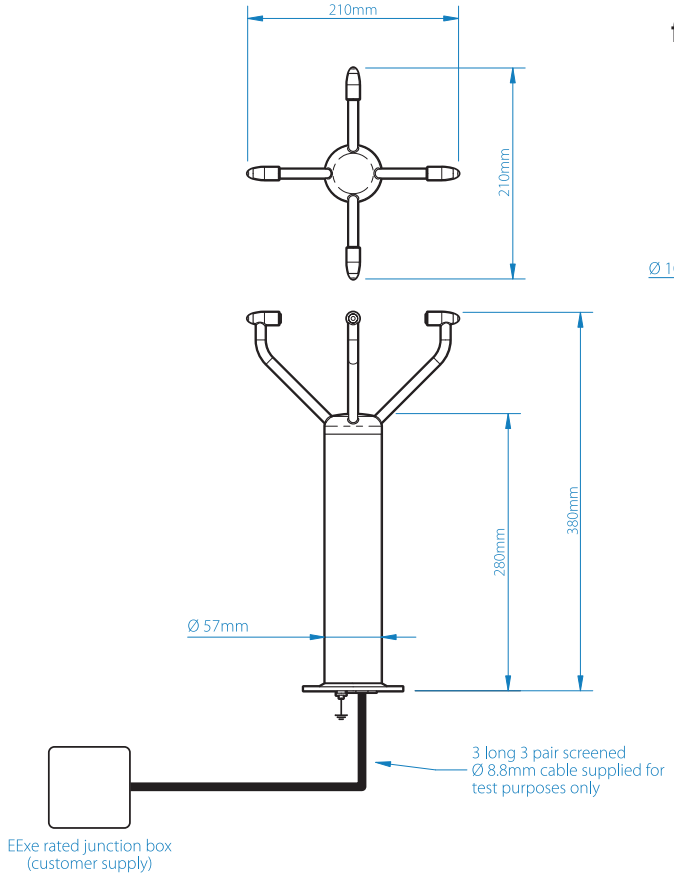

WindObserver IS Ultrasonic Anemometer for use in Hazardous Areas

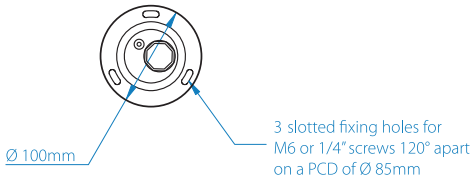

WIND SPEED

Range	0 - 75 m/s
Starting Threshold	0.01 m/s
Accuracy	2% at 12 m/s
Resolution	0.01 m/s

DIRECTION

Range	0 - 360°
Accuracy	± 4°
Resolution	1°
Dead Band Direction	None

MEASUREMENT

Output	1 Hz, 2 Hz or 4 Hz
Parameters	UV, Polar and NMEA
Units	m/s, knots, mph, kph, ft/min
Averaging	0 - 3600s

DIGITAL OUTPUT

Communication	RS422, full duplex to PCI or LVPCI
Baud Rates	1200, 2400, 4800, 9600, 19200
Formats	8 bit data, odd, even or no parity
Anemometer Status	Supplied as part of standard Gill message (NMEA output includes V and A codes as part of the message)

POWER REQUIREMENT

Anemometer	6V - 12VDC, 30 mA peak (from PCI or LVPCI) All circuits protected to 0.8 Joules

MECHANICAL

External Construction	Stainless Steel 316
Weight	1.9 kg
Size	380mm x 210mm

ENVIRONMENTAL

Moisture Protection	IP66 (NEMA4X)
Ambient Operating Temperature	-30°C to + 70°C
Storage Temperature	-50°C to + 75°C
Humidity	0% to 100% RH
Precipitation	300mm/hr
EMC	EN 60945:2002+AC1 (Clause 9, 10 & 11.2) EN 61326-1:2013

CERTIFICATIONS & APPROVALS

Approvals: Intrinsic Safety	ATEX, IECEx & UKEX certification. Certificates available to view in full on gillinstruments.com

Low Voltage Power & Communications Interface (LVPCI) for use in Non-Hazardous areas

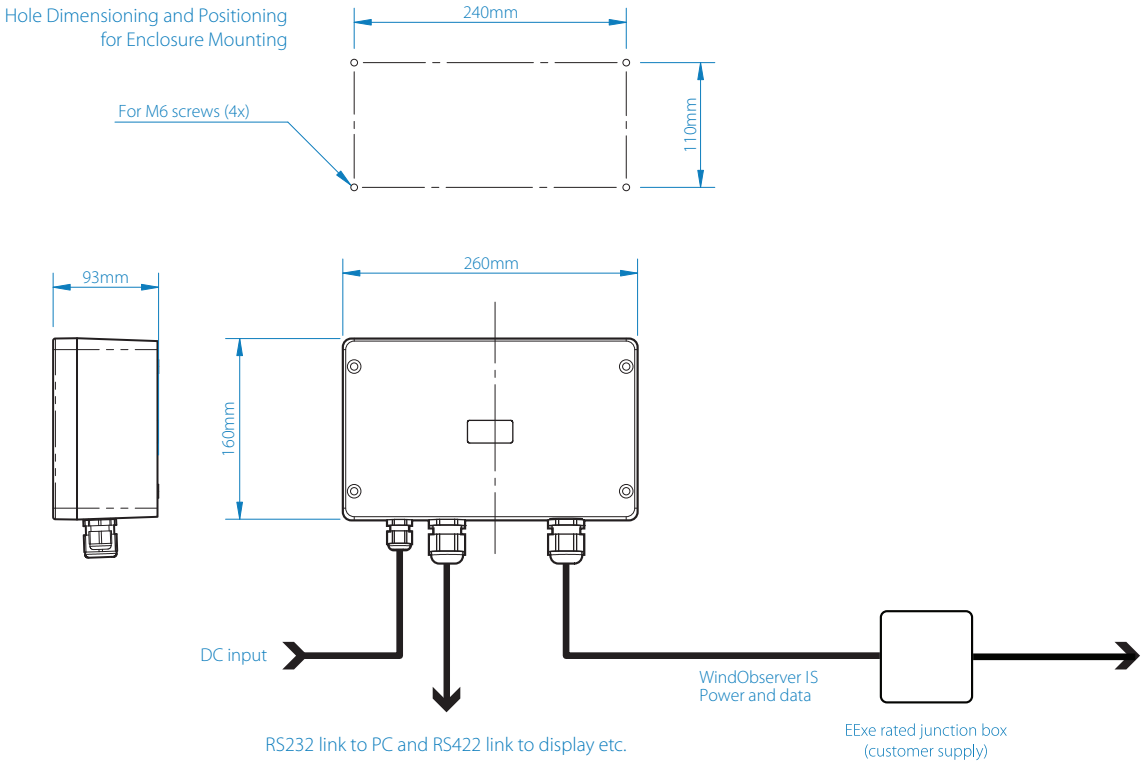

Mains Voltage Power & Communications Interface (PCI) for use in Non-Hazardous areas

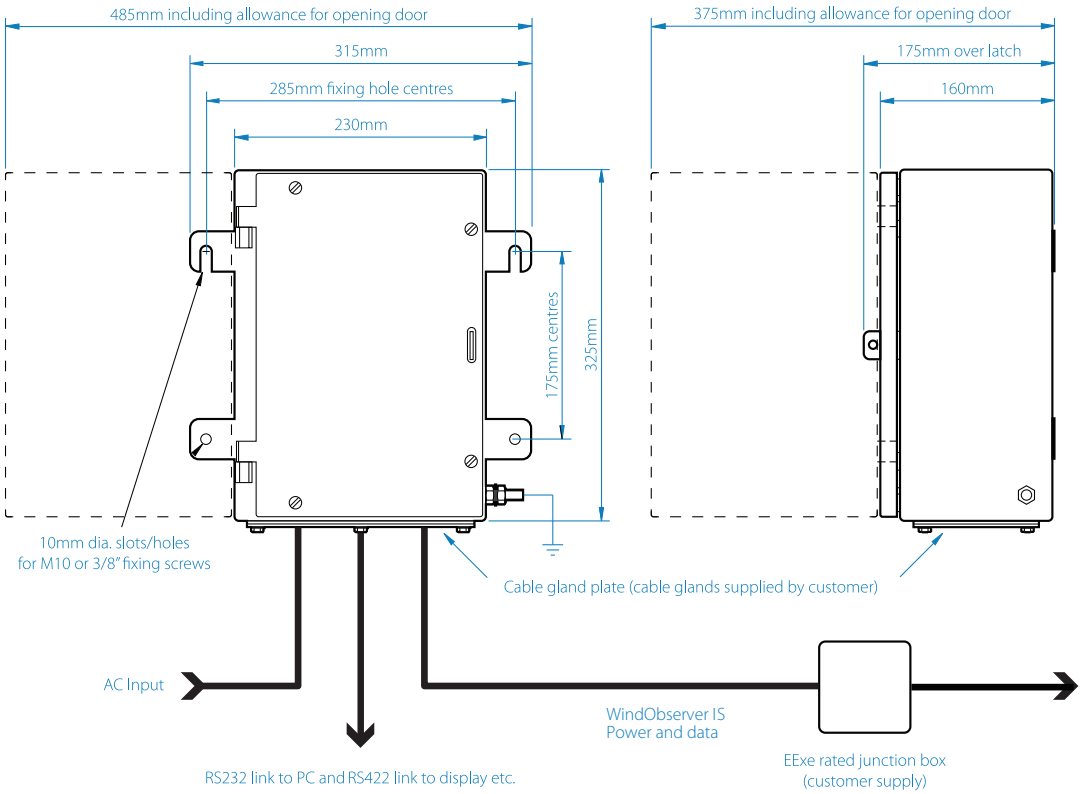

CERTIFICATIONS & APPROVALS

LOW VOLTAGE POWER & COMMUNICATION INTERFACE	
Approvals: Intrinsic Safety	ATEX, IECEx & UKEX certification. Certificates available to view in full on gillinstruments.com

MAINS VOLTAGE POWER & COMMUNICATION INTERFACE	
Approvals : Intrinsic Safety	ATEX, IECEx & UKEX certification. Certificates available to view in full on gillinstruments.com

INPUTS AND OUTPUTS

Digital Input	RS422 (data from WindObserver IS to LVPCI)
	Data lines between the anemometer and power supply opto-isolated and protected with zener barriers
Digital Output	RS232 and RS422 (data from LVPCI)

Digital Input	RS422 (data from WindObserver IS to PCI)
	Data lines between the anemometer and power supply opto isolated and protected with zener barriers
Digital Output	RS232 and RS422 (data from PCI)

POWER

Power Requirement	DC Supply
Input Power	9V to 30V dc at 200mA max (fused 20mm, 1 A anti surge)
	Galvanic isolation between input power and WindObserver IS
	No external earth required
Output Power	10.5Vdc at 50mA to WindObserver IS (fused 100mA)

Power Requirement	AC Supply
Input Power	100 Vac - 120 Vac, 10 VA for the 115V switch position 200 Vac - 250 Vac, 10 VA for the 230V switch position
	Galvanic isolation between input power and WindObserver IS supply
	Power Supply case must be externally earthed
Output Power	10.5Vdc at 50mA to WindObserver IS (fused 100mA)

MECHANICAL

External construction	Fibox Euronord Polyester
Size	260 x 160 x 93mm
Weight	2.4 Kg
	Refer to additional information drawing on data sheet or manual

External construction	Stainless Steel 316
Size	230 x 325 x 175mm
Weight	9.5 Kg
	Refer to additional information drawing on data sheet or manual

ENVIRONMENTAL

Moisture protection	IP54
Ambient Operating Temperature	-30°C to +60°C
Storage Temperature	-50°C to +75°C
Humidity	5% to 90% RH
EMC	EN 61326-2-1:2013, EN 61204-3:2000, EN 60945:2002 clause 9 and 10
Standards	Performance traceable to UK national standards

Moisture protection	IP65
Ambient Operating Temperature	-30°C to +60°C
Storage Temperature	-50°C to +75°C
Humidity	5% to 90% RH
EMC	EN61000-6-1:2007, EN61000-6-3:2007/A1:2011
Standards	Performance traceable to UK national standards

Gill Instruments Limited
Saltmarsh Park, 67 Gosport Street
Lymington, Hampshire SO41 9EG
United Kingdom

Tel: +44 (0) 1590 613 500

contact@gillinstruments.com

gillinstruments.com
1954 - 004 Iss 10

Gill Instruments Limited, Reg No. 2281574
Registered Office: Towngate House, 2-8 Parkstone Road, Poole. BH15 2PW